| REV. | DESCRIPTION | DATE | DRAFTER | APPROVER |
|---|---|---|---|---|
| A1 | DWG.REL | 2020.05.25 | DENG | JIN |

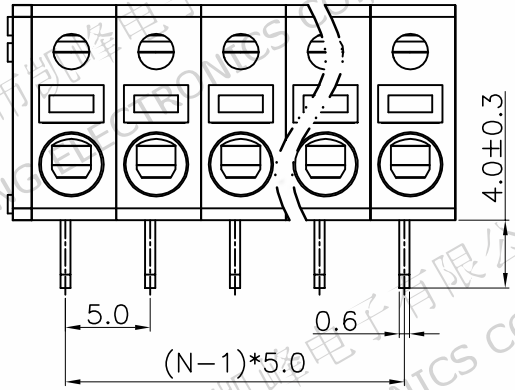


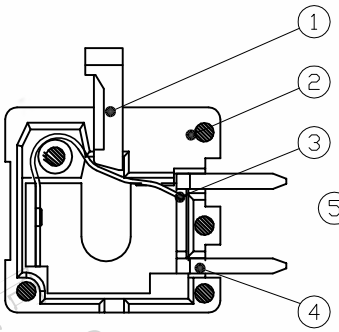


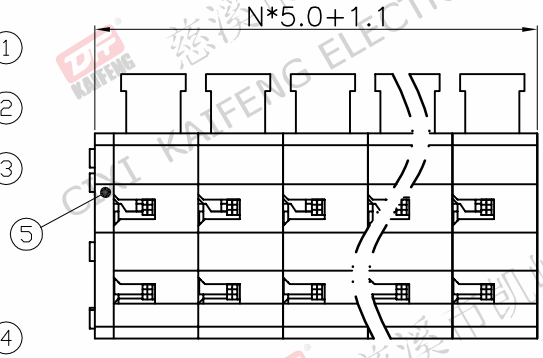


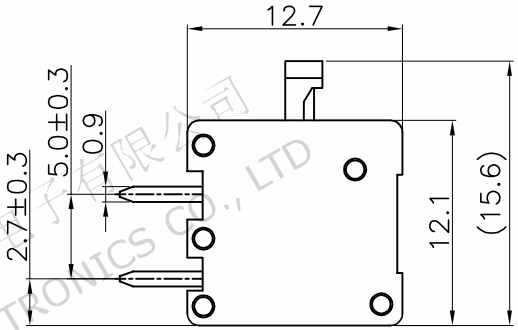


- Material
  - ①Button : PA66, UL94V−0
  - ②Cover : PA66, UL94V−0
  - ③Housing : PA66, UL94V−0
  - ④Reed : Stainless steel
  - ⑤Pin header :Copper alloy, Tin plated

- Electrical

| | UL | IEC |
|---|---|---|
| Rated voltage : | 300V | 250V |
| Rated current : | 8A | 10A |

  Contact resistance : 20mΩ(Max)
  Insulation resistance: 500MΩ/DC500V
  Withstanding Voltage : AC2000V/1min
  Wire range: 24−16AWG 1.5mm²

- Mechanical
  Operating temperature:−40℃~+105℃
  Soldering temperature:250℃±5/5sec
  Strip length: 8−9mm

- RoHS compliance

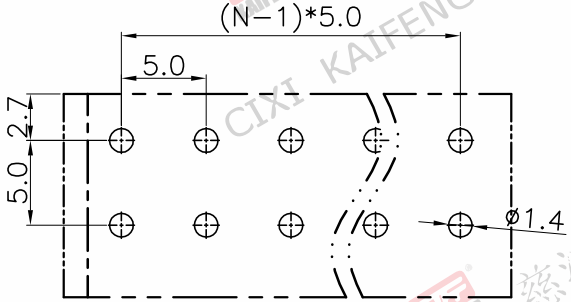


P.C.B.LAYOUT

HOW TO ORDER

KF246R−5.0−XXP−1 X−XXXXX

- KF246R → MODEL
- 5.0 → Pitch:mm
- XXP → No.of poles: 2~24P
- 1 → 1:Single Pitch, 2:Double Pitch
- X → Color: G:Green, R:Red, K:Black, W:White, O:Orange, B:Blue, GR:Gray
- XXXXX → Customer Request

| Pitch range | | | Nominal dimension range | | | | | | |
|---|---|---|---|---|---|---|---|---|---|
| >0 ~ 6 | >6 ~ 10 | >10 ~ 24 | >0 ~ 30 | >30 ~ 60 | >60 ~ 100 | >100 ~ 150 | >150 | | 0.1/10 |
| ±0.15 | ±0.20 | ±0.30 | ±0.30 | ±0.50 | ±0.70 | ±1.00 | ±1.30 | | ±2° |

| | | | |
|---|---|---|---|
| PROJECTION | | TITLE | KF246R−5.0−XXP−1X |
| UNIT | mm | | |
| SHEET SIZE | A4 | SERIES | KF246 |
| DRAWING TYPE | CUSTOMER DRAWING | | |
| SCALE | 1:1 | SHEET | 1 OF 1 |
| DRAWING NO. | W11000092 | | |

慈溪市凯峰电子有限公司
CIXI KAIFENG ELECTRONICS CO.,LTD